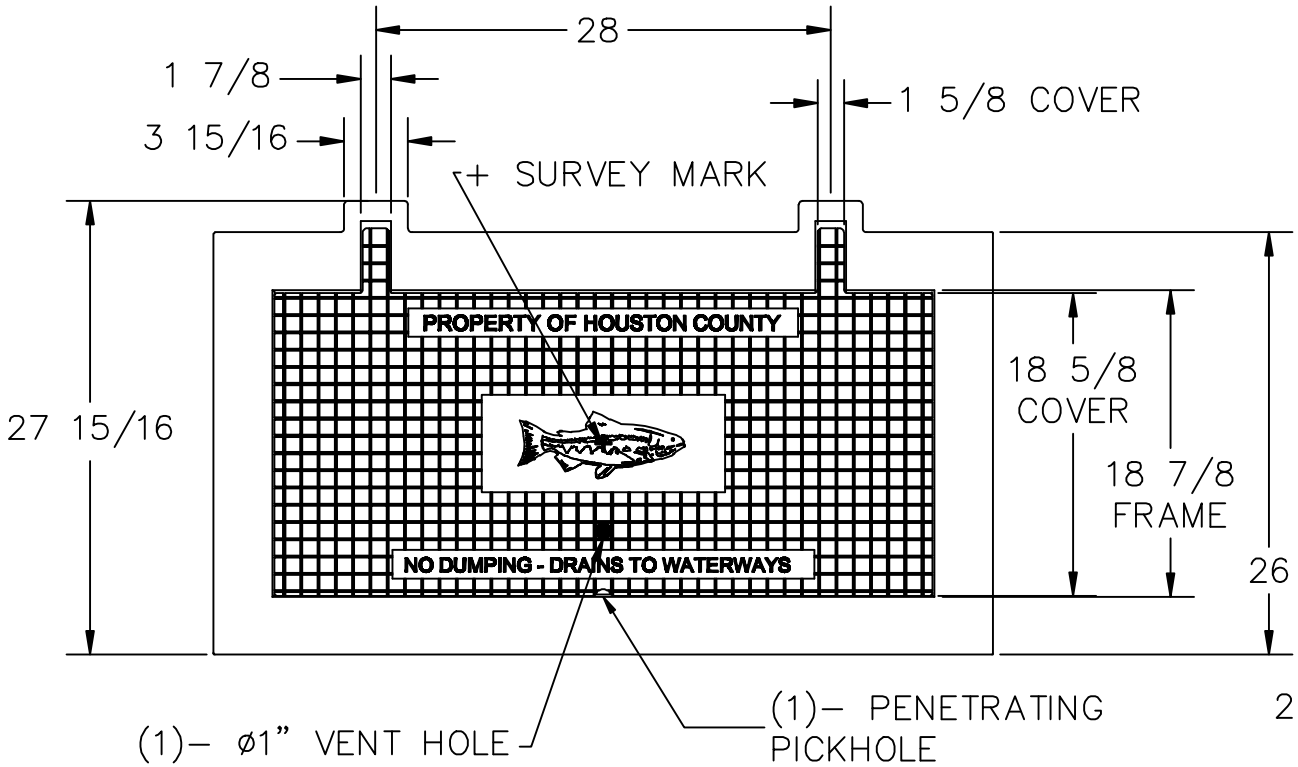

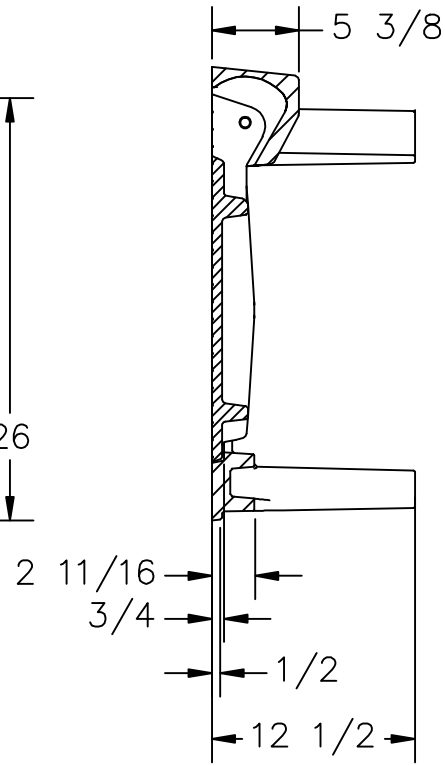

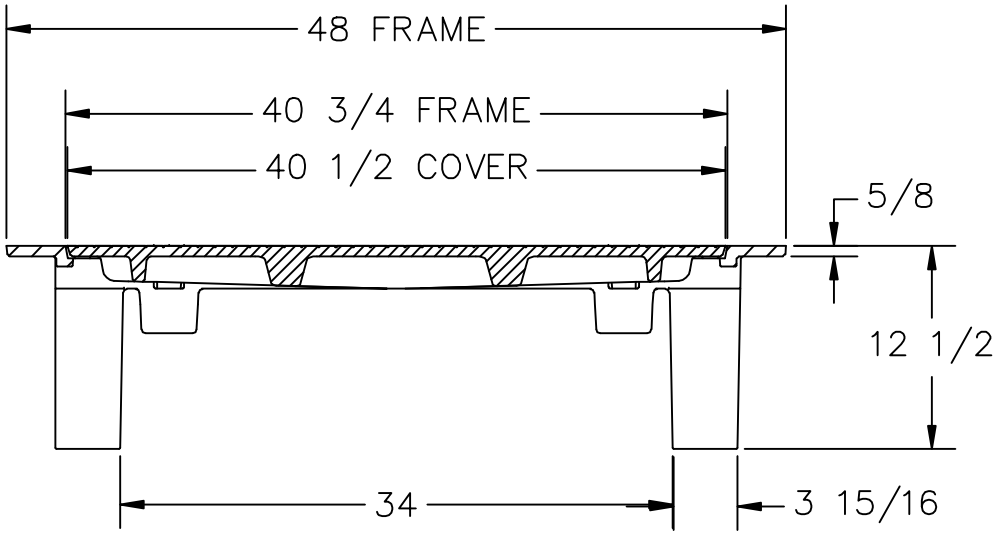

U.S. FOUNDRY & MFG. CORP.
MEDLEY, FLORIDA

DESCRIPTION
USF 5168 & PG COVER

MATERIAL: ASTM–A48 GRAY IRON CLASS: 35B
FRAME WEIGHT: 225 GRATE WEIGHT: 170

UNLESS OTHERWISE NOTED WEIGHT IS IN POUNDS AND APPROXIMATED

DWN. BY:	SCALE:	ITEM No:	DWG DATE:
ULS	1"=1'	8140455	05–19–08
CHK. BY:			DWG. No: / REV: 1

REV:	DATE:	DESCRIPTION:	REV BY:
1	05–29–08	ADD 1 VENTHOLE	ULS